QE8SC055F[ ]S[ ]
QE8SC070F[ ]S[ ]
QE8SC090F[ ]S[ ]

MODEL NO.	"A" □	"B"	"C"	"D"	"L"
41S08	H 1/2"	106.2	116.5	137.2	557.5
61S08	H 1/2"	137.2	148.2	188.0	608.3
81S08	H 1/2"	188.0	199.0	238.8	659.1

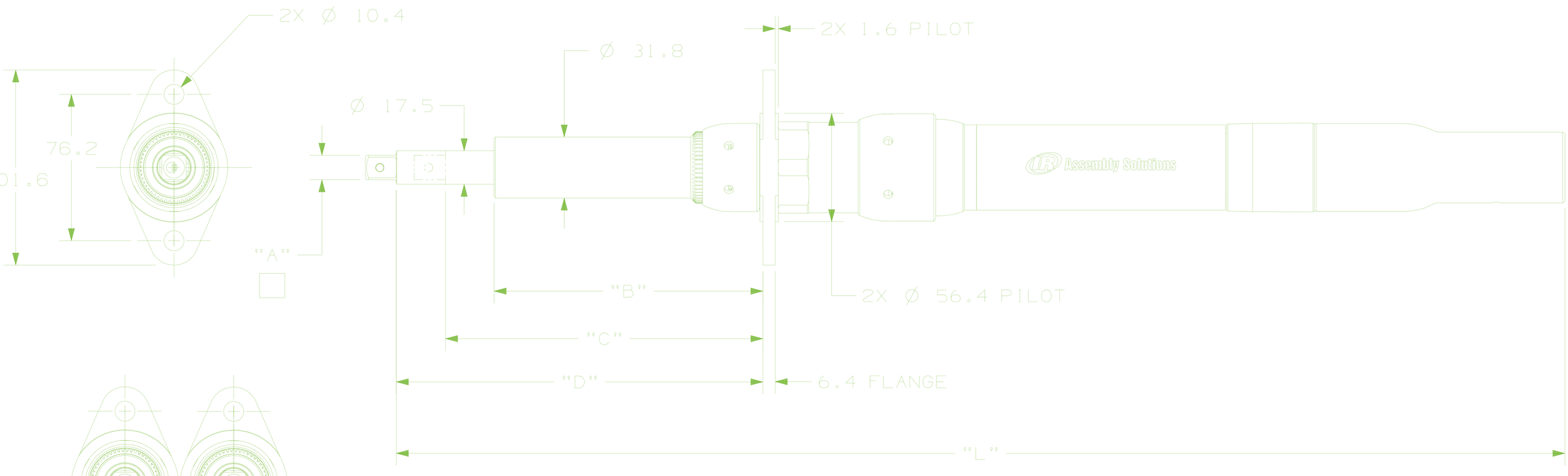

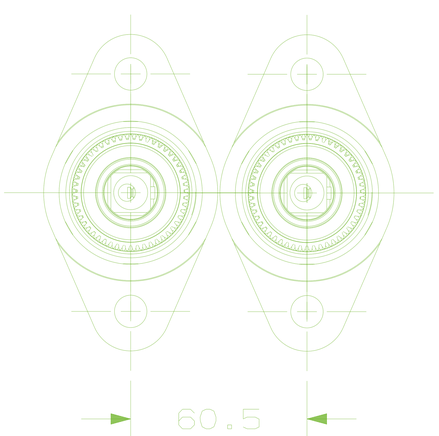

H INCH DIMENSION

80119424_D_SH1